Nominal data

Type	3214 JH3	
Nominal voltage	VDC	24
Nominal voltage range	VDC	12 .. 27.6
Speed	min^{-1}	11000
Power input	W	30
Min. ambient temperature	°C	-20
Max. ambient temperature	°C	70
Air flow	m^3/h	237
Sound power level	B	7.8
Sound pressure level	dB(A)	69

ml = Max. load · me = Max. efficiency · fa = Running at free air · cs = Customer specs · cu = Customer unit
Subject to alterations

3214 JH3

DC axial compact fan

Technical features

Housing material	Fibreglass-reinforced plastic (PBT)
Impeller material	Fibreglass-reinforced plastic (PA)
Mass	0.280 kg
Dimensions	92 x 92 x 38 mm
Direction of air flow	Air exhaust over bars
Direction of rotation	Right, looking at rotor
Bearing	Ball bearings
Lifetime L10 at 40 °C	65000 h
Lifetime L10 at maximum temperature	32500 h
Connection line	Single strands AWG 22, TR 64, bared and tin-plated.
Motor protection	Protected against polarity reversal and blocking.
Option	Speed signal

DC axial compact fan

Product drawing

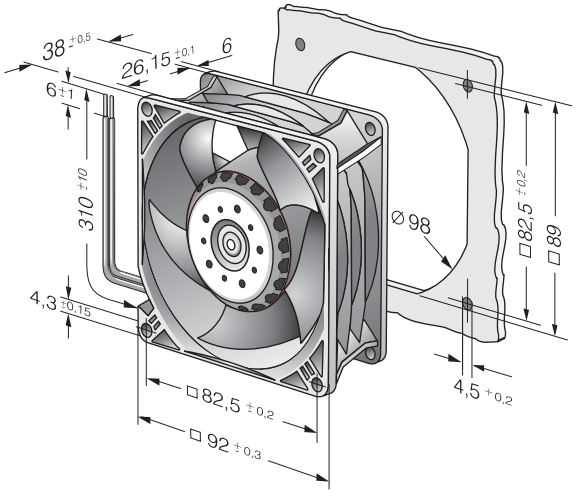

DC axial compact fan
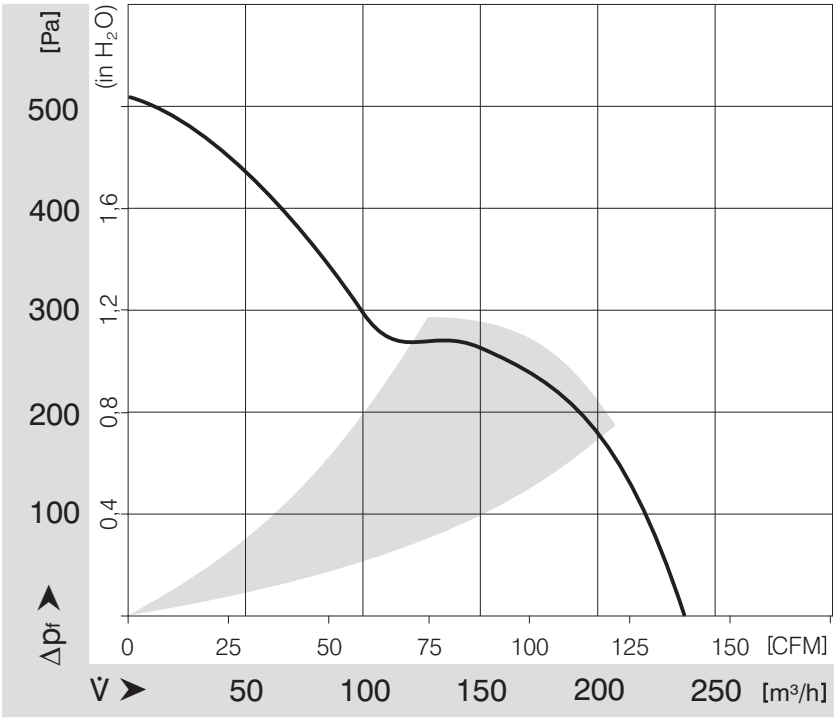
Charts: Air flow